Please read this manual carefully before use!

User Manual

EN

TRADITION DEUTSCHER QUALITÄT

KÖNNER SÖHNEN

Inverter generator

KS 4500iS
KS 4500iS HE
KS 4500iS PRO

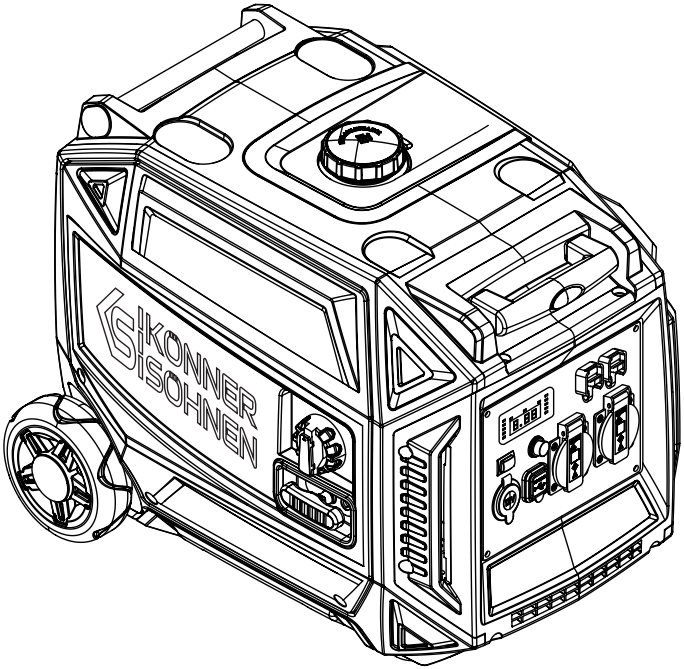

ANNEX

Fig. 1A

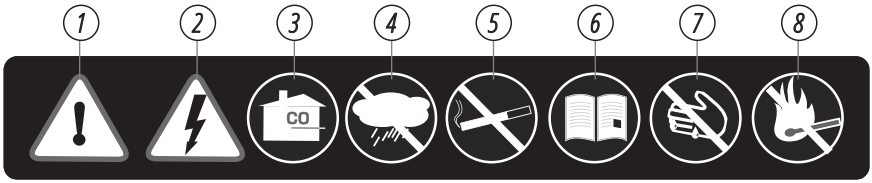

Fig. 1B

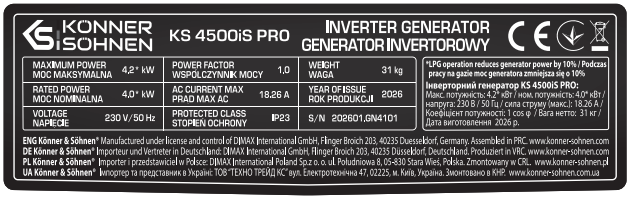

Fig. 1C



Fig. 1D

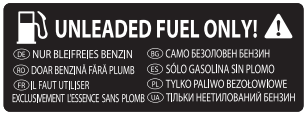

Fig. 1E



Fig. 1F



Fig. 2

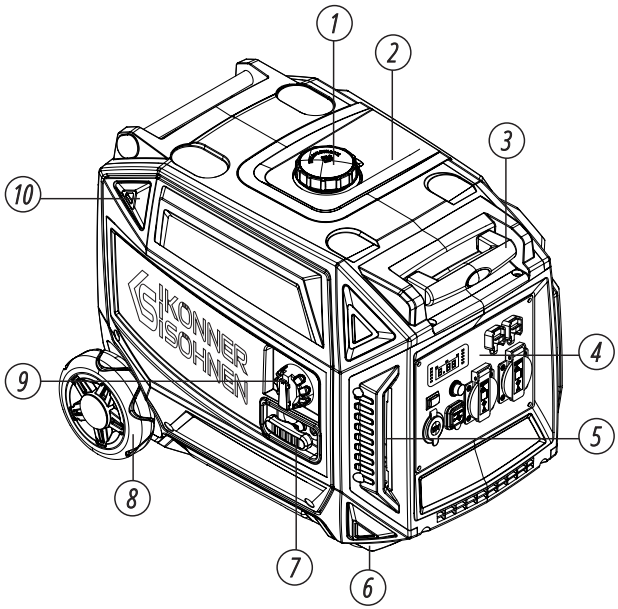

Fig. 3
Models KS 4500iS

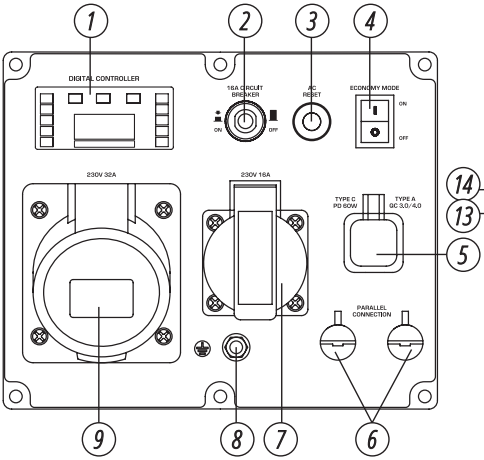

Fig. 4
Models KS 4500iS HE

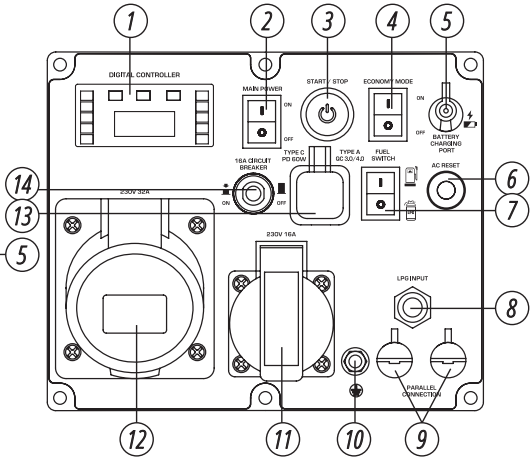

Fig. 5
Model KS 4500iS PRO

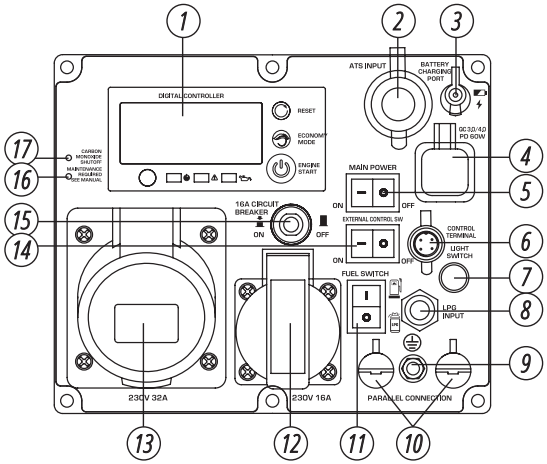

Fig. 6.1



Fig. 6.2



Fig. 6.3



Fig. 6.4



Fig. 6.5

a)



b)



Fig. 6.6



Fig. 6.7



Fig. 6.8



Fig. 6.9



Fig. 7

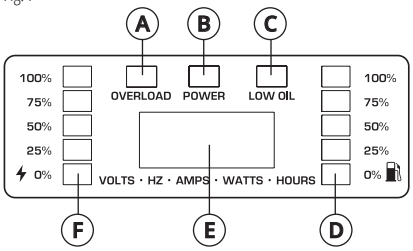

Fig. 8

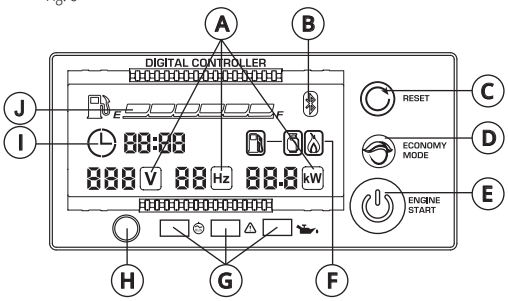

Fig. 9A

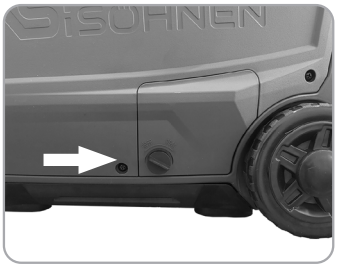

Fig. 9B



Fig. 10



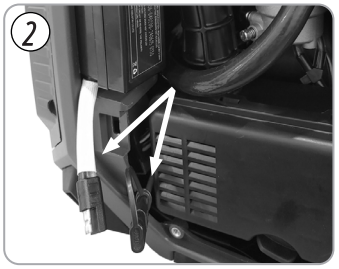

Fig. 17

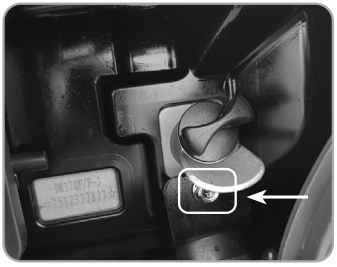

Fig. 18

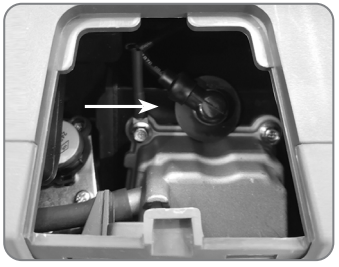

INTRODUCTION

Thank you for choosing **Könner & Söhnen®** products. This manual provides a brief description of safety requirements, setup procedures, and operating instructions. More information is available in the support section at:
konner-sohnen.com/pages/instructions

You can also download the manual by scanning the QR code or by visiting the official importer's website at
www.konner-sohnen.com



| Please, read this manual before use!

The manufacturer reserves the right to make changes that may not be reflected in this manual, including:

- The manufacturer reserves the right to make changes in the product design, configuration and construction.
- The images and drawings in this manual are for reference only and may differ from the actual components and inscriptions on the products.

Contact information for technical support is provided on the official website. All information in this manual is correct to the best of our knowledge at the time of publication. The current list of service centers can be found on the official importer's website at **www.konner-sohnen.com**

⚠ **ATTENTION – DANGER! Failure to follow the recommendations marked with this sign may lead to serious injury or death of the operator or third parties.**

⚠ **IMPORTANT! Useful information while operating the machine.**

SAFETY INFORMATION

- Generators must not be operated unprotected in rain, snow, or on wet ground, as this can lead to severe electric shocks or short circuits. Prolonged direct sunlight should be avoided. Generators must not be operated near flammable or easily ignitable materials.
- The generator must be operated outdoors, with a safety distance of at least 6 m from all doors, windows, and ventilation openings of the building. A roof or running cover is recommended to protect the generator from rain and splashing water, keeping it dry while ensuring sufficient airflow for cooling and exhaust.
- A clearance of at least 50 cm on each side of the generator, as well as from above, must be maintained to ensure adequate cooling and ventilation. The distance to the control panel must be at least 1 m.
- The generator must be positioned so that exhaust fumes do not enter the air intake.
- Operation in a room is not intended.
- Safety shoes, safety gloves, and hearing protection should be worn as personal protective equipment if necessary.

Residual risks

Despite all design and safety measures applied to this generator set, certain residual risks may still remain during its operation.

Noise exposure

The guaranteed sound power level of this generator does not exceed the limits established by Directive 2000/14/EC and applicable EU regulations.
However, prolonged exposure to noise, even within permitted limits, may cause discomfort or fatigue.
Recommendation: When working close to the running generator for extended periods, use approved hearing protection and avoid staying unnecessarily near the noise source.

Vibration risk

The generator is equipped with vibration-isolating mounts to reduce transmission of vibration to surrounding structures.
Nevertheless, continuous or improper operation may lead to operator discomfort or health effects associated with long-term vibration exposure (such as hand-arm vibration syndrome).
Recommendation: Operate the generator only on its vibration-damping supports and avoid prolonged contact with vibrating components.

Environmental hazards

During fuel filling, oil change, or maintenance, spilled oil or fuel may cause environmental contamination.

⚠ **IMPORTANT! Prevent any fuel or oil from entering soil, sewage systems, or water sources.**

In case of leakage or accidental spill, stop the engine immediately, collect the liquid with approved absorbent material, and dispose of it according to local environmental regulations.

ELECTRICAL SAFETY

⚠ ATTENTION – DANGER! Generator produces electricity. Observe safety regulations to avoid electric shock.

⚠ IMPORTANT! Generator is built as a mobile power source in an IT system (isolated terra) and features basic protection through insulation of the live conductors. The neutral conductor, like the phase conductors, is insulated from the generator frame (floating neutral).

⚠ IMPORTANT! The PE pins of the sockets and the generator's grounding screw are connected to the generator frame and serve to equalize potential between the generator and the electrical loads. Grounding within the IT system is not required.

Instructions for operating electrical devices with generators that have multiple simultaneously active sockets with floating neutral conductor (IT system):

Multiple electrical devices can be operated simultaneously from the generator if they have an isolated equipotential bonding conductor (PE contact of the sockets and plugs) and contact is ensured to each electrical device. The generator housing and the electrical devices must not have any conductive contact with earth.

When using the generator on a construction site, or if the above conditions cannot be met, either insulation monitoring or residual current protection (e.g., an RCD adapter with a tripping current of ≤ 30 mA) must be installed for each socket.

The generator is designed for operating conventional electrical appliances. Connecting to power supply systems, charging the batteries PV systems or power stations, etc., is a special case requiring a specially tailored solution that takes into account the characteristics of such a system and the generator itself.

⚠ IMPORTANT! A sub-distribution board may only be connected to the generator's sockets using additional protective measures appropriate to the installed system (IT or TN).

IT network: The sub-distribution board should be equipped with insulation monitoring, or at least with residual current devices (RCDs) for every socket. The generator grounding screw is connected to the equipotential bonding bar of the distribution board.

TN network: The generator neutral conductor is externally grounded. Residual current devices must be used as a protective measure. Selectivity of the tripping currents must be observed. The generator grounding screw is connected to the grounded earthing bar of the distribution board with a 6-10 mm² copper cable (depending on local regulations).

⚠ IMPORTANT! Cables to the electrical loads or to the sub-distribution board must be thoroughly inspected for damage before commissioning the generator. Operation with damaged cables or plugs is not permitted.

PRECAUTIONS WHEN WORKING WITH GASOLINE GENERATOR

Do not start the generator operation upon presence of electric load! Disconnect the load before you stop the engine. **Use only unleaded gasoline with an octane rating of 90–95 containing no more than 10% ethanol.** The use of kerosene or any other type of fuel is not allowed! Always follow the manufacturer's recommendations regarding the shelf life and storage of fuel. The fuel in the tank comes into contact with air, which can affect its quality. Over time, depending on the quality of the fuel, deposits may accumulate in the float chamber of the carburetor, which must be drained regularly to ensure the carburetor functions properly. If the generator is not used for an extended period of time, we recommend completely draining the gasoline from the carburetor and the tank via the drain screw on the carburetor to prevent the formation of deposits in the fuel system. Failure to follow these recommendations may lead to the damage of the carburetor.

⚠ ATTENTION – DANGER! Fuel contaminates the land and groundwater. Do not allow the leaking gasoline from the tank!

Fire safety



Keep a suitable fire extinguisher nearby when operating or servicing the generator.

Use only extinguishers suitable for flammable liquids and electrical equipment, such as:

- CO_2 (carbon dioxide) extinguishers
- Foam extinguishers (AFFF type)

Do not use water-based extinguishers on fuel or electrical fires.

Ensure personnel are trained in the proper use of fire extinguishers.

Each time you start the generator, inspect the battery cables to prevent sparking and possible fire. The batteries must be kept clean. Use only the recommended cables and connections during generator operation. Fuel and fumes generated during operation can be flammable and potentially explosive. Safety regulations require fully charged fire extinguishers to be kept within easy reach of the generator.

⚠ ATTENTION – DANGER! Operate the generator outdoors only. Never operate it inside a house, garage, basement, shed, container, vehicle or any partially enclosed space, even if doors and windows are open.

PRECAUTIONS WHEN WORKING WITH HYBRID GENERATOR

IMPORTANT! For dual fuel models, propane-butane mixture for cars (LPG) or propane can be used as gas! It is forbidden to use any other gas!

Do not start the generator operation upon presence of electric load! Before usage make sure, that all the hoses are connected properly. In case of gas leakage, stop the gas flow from the source to generator and ventilate the room as soon as possible. For stopping gas powered engine: disconnect all the connected devices first, then close the gas valve, then turn off the engine. After that set the starter switch to OFF position and turn off the gas supply valve.

ATTENTION – DANGER! Do not allow sparks near gas powered generetor during its work.

ATTENTION – DANGER! The gas cylinder valve must not be closed when the generator is not running. The generator must not be operated on gas in basements.

ATTENTION – DANGER! Pay attention! Usage of gasoline together with liquefied gas is forbidden! When you operate using gasoline, you must stop LPG supply. When you operate generator using LPG - you must stop gasoline supply.

IMPORTANT! The gas withdrawal rate depends on the size of the gas cylinder and the temperature; this must be strictly observed when operating the generator on LPG. Liquid gas evaporates inside the cylinder before reaching the pressure regulator, causing the cylinder to cool down. A gas cylinder heater should be used if necessary.

SAFETY SYMBOLS DECRYPTION

Fig. 1A

1. Be careful when operating the device! Observe the safety instructions in this manual.
2. The device generates electricity. Observe safety precautions to avoid electric shock.
3. Operate the generator outdoors only. Exhaust gases contain CO, whose vapors are life-threatening.
4. Do not use or store the device in high humidity.
5. Do not smoke while operating the generator!
6. Read this owner's manual carefully before operating the device.
7. Do not touch the generator with wet or dirty hands.
8. Observe fire safety regulations, and do not operate the generator near open flame.

Fig. 1B Product label on the generator, listing technical features, specifications, and manufacturer information for customer and regulatory reference.

Fig. 1C Indicates the noise level.

Fig. 1D Use only unleaded petrol with an octane rating of 90–95 containing no more than 10% ethanol.

Fig. 1E Air filter changing is to be performed each 50 hours of the power plant operation (every 100 hours in unusually dusty conditions).

Fig. 1F Please don't touch! The working surface heats up when running the generator.

MAIN OVERVIEW (Fig.2)

1. Fuel tank cap
2. Removable rubber
3. Transport handle
4. Control panel
5. Built-in LED lighting
6. Anti-vibration system
7. Manual starter
8. Transport wheels
9. Fuel valve for models KS 4500iS HE, KS 4500iS PRO
   Multifunction switch for model KS 4500iS
10. Reinforced rubber corner elements

Control panel for model KS 4500iS (Fig.3)

1. Small digital controller
2. 16A AC circuit breaker
3. Reset button
4. Economy mode switch
5. USB-Outputs 2×5V USB
6. Generator parallel socket
7. AC outlet Schuko 230V
8. Earthing bolt
9. AC outlet CEE 230V 32A

Control panel for model KS 4500iS HE (Fig.4)

1. Small digital controller
2. Main power switch
3. Electric START/STOP button
4. Economy mode switch
5. Battery charging port
6. Reset button
7. Fuel selector switch
8. LPG input
9. Generator parallel socket
10. Earthing bolt
11. AC outlet Schuko 230V
12. AC outlet CEE 230V 32A
13. USB-Outputs 2×5V USB
14. 16A AC circuit breaker

Control panel for model KS 4500iS PRO (Fig.5)

1. Big digital controller
2. ATS input
3. Battery charging port
4. USB-Outputs 2×5V USB
5. Main power switch
6. Connection for external PF control contacts
7. Light switch
8. LPG input
9. Earthing bolt
10. Generator parallel socket
11. Fuel selector switch
12. AC outlet Schuko 230V
13. AC outlet CEE 230V 32A
14. External control switch
15. 16A AC circuit breaker
16. Maintenance required indicator
17. Carbon monoxide shutoff

COMPONENTS OF SET

Inverter generators are supplied in a set with portable power plug 230V (32A) (Fig. 6.1), plug 230V (16A) (Fig. 6.2), spark plug wrench (Fig. 6.3), screwdriver (Fig. 6.4), oil funnel (Fig. 6.5 – a) for the KS 4500iS model; b) for dual-fuel models), LPG/NG valve for dual fuel models (Fig. 6.6), two way stop start line (10m) for model KS 4500iS Pro (Fig. 6.7), charging adapter for models KS 4500iS HE, KS 4500iS Pro (Fig. 6.8), remote control key for models KS 4500iS HE, KS 4500iS PRO (Fig. 6.9).

SPECIFICATIONS

Model	KS 4500iS	KS 4500iS HE	KS 4500iS PRO
Voltage	230V	230V	230V
Maximum/Peak power	4,2 kW/4,5 kW	4,2* kW/4,5* kW	4,2* kW/4,5* kW
Nominal power	4,0 kW	4,0* kW	4,0* kW
Frequency	50 Hz	50 Hz	50 Hz
Current (max.)	18,2 A	18,2 A	18,2 A
Outlets	1×Schuko 230V 16A, 1×CEE 230V 32A		
Engine start	manual	manual/electric/remote	manual/electric/remote/auto
Fuel tank volume	7 l	7 l	7 l
Fuel consumption at 50% load**	1,35 l/h	1,35 l/h	1,35 l/h
Digital controller***	smaller	smaller	bigger
APP control	–	+	+
USB + Type C	2×USB (Type-A QC3.0/4.0, Type-C PD25W)		
Engine model	KS 200i	KS 200i	KS 200i
Engine volume	192 cm^3	192 cm^3	192 cm^3
Engine type	gasoline, 4 stroke cycle engine	LPG/gasoline 4 stroke cycle engine	
Engine power	6,8 hp	6,8 hp	6,8 hp
Generator parallel socket	+	+	+
Crankcase volume	0,52 l	0,52 l	0,52 l
Power factor	cos φ 1 (230V)	cos φ 1 (230V)	cos φ 1 (230V)
ATS input	–	–	+
CO sensor	–	–	+
LED Light	–	–	+
Gross dimensions (L×W×H)	610×470×490 mm	760×470×490 mm	760×470×490 mm
Net dimensions (L×W×H)	558×418×455 mm	558×418×455 mm	558×418×455 mm
Lithium battery	–	2 Ah	2 Ah
Gross/Net weight	33,8/30,5 kg	38,3/31,4 kg	38,8/31,4 kg
Protection class	IP23M		
Maximum permissible deviation from the rated voltage: ±5%			

*LPG operation reduces generator power by 10%.

**Fuel consumption depends on many factors, such as load, fuel quality, season, altitude, technical condition of the generator.

*** Smaller digital controller: overload alarm; output indicator; low oil alarm; fuel level indicator; voltage, frequency, current, output power, working hours; load.

Bigger digital controller: low oil alarm, overload alarm, output indicator; output power, frequency, voltage, working hours, fuel level; Bluetooth App Control, AC reset, economy mode, engine start, fuel type, CO sensor failure).

The optimal operating conditions are ambient temperature of 17-25°C, barometric pressure of 0.1 MPa (760 mm Hg), and relative humidity of 50-60%. Under these environmental conditions, the generator can provide maximum performance in terms of the declared specifications. In the event of deviations from these environmental indicators, the generator performance may vary.

Please note that continuous loads exceeding 80% of the generator's rated power are not recommended in order to extend its service life.

EC Declaration of Conformity

Nr. 288

Manufacturer: DIMAX INTERNATIONAL GmbH

Address: Flinger Broich 203, 40235 Duesseldorf, Germany

We DIMAX INTERNATIONAL GmbH, hereby declare under our sole responsibility that specified below products is in conformity with the relevant Union harmonisation legislation.

Product: Inverter generator

Type / Model: KS 4500iS, KS 4500iS HE, KS 4500iS PRO

Applied EC Directives: (EU) 2023/1230 Machinery Regulation
2014/30/EC Electromagnetic compatibility Directive (EMC)
2000/14/EC Noise Directive

Applied Standards: EN ISO 8528-13:2026,
EN 55012:2007+A1:2009,
EN IEC 61000-6-1:2019
ISO 8528-10: 2022
EN ISO 3744:2010

Gasoline engines KS 200i correspond to European Emission Standard Stage V.
This is confirmed by EU TYPE - APPROVAL CERTIFICATE issued by TÜV SÜD Product Service GmbH.
Address: Ridlerstraße 65, 80339 Munich, Germany.

For models KS 4500iS, KS 4500iS HE, KS 4500iS PRO: Noise measured Lwa = 95 dB (A), guaranteed Lwa = 97 dB (A).

Notification body responsible for 2000/14/EC Noise Directive certificate issuing is TÜV SÜD Industrie Service GmbH.
Address: Westendstrasse 199, 80686 Munich, Germany.
Notified Body number: 0036.

Fulfilment of the applicable essential health and safety requirements set out in Annex III has been demonstrated.
This declaration of conformity is issued under the sole responsibility of the manufacturer.
The machinery or the associated product is subject to the conformity assessment procedure based on internal production control (Module A).

Issued date: 2026-12-10
Place of issue: Duesseldorf
Director: Fomin P.

DIMAX International GmbH
Flinger Broich 203 40235 Düsseldorf
USt-ID DE296177274
kpenner-saennen.com

P. Fomin

CE

REACH Regulation (EC) No. 1907/2006

The manufacturer confirms that this product complies with the requirements of the REACH Regulation concerning the restriction of substances of very high concern (SVHC). We confirm that supplied parts comply with REACH Regulation (EC) 1907/2006 and contain no SVHC above 0.1%

Based on information received from component suppliers, no SVHC are present in concentrations exceeding the limits defined by the regulation.

This declaration is made on the basis of self-assessment and supplier statements.

RoHS Directive 2011/65/EU

This product contains electrical and electronic components that are subject to the RoHS Directive 2011/65/EU.

Based on information and test reports provided by component suppliers, the manufacturer confirms that these components comply with RoHS Directive 2011/65/EU.

TERMS OF USE OF INVERTER GENERATOR

Before starting the device, remember that the total power of the connected power consumers should not exceed the nominal power of the generator.

⚠ IMPORTANT! Inverter generators produce 230 V at 50 Hz and must not be used as a replacement for the main power grid when powering devices designed to feed energy into the electrical grid (such as grid-tied inverters, hybrid inverters, microinverters, etc.). These devices may detect the 230 V 50 Hz output from the inverter generator as the main power supply and can damage the generator through backfeeding.

⚠ IMPORTANT! Make sure that the control panel, the blinds and the underside of the inverter are well cooled and protected against the ingress of small solids, dirt, and water. Improper operation of the cooler can cause damage to the motor, inverter or alternator.

GENERATOR OPERATION

Oil level indicator

When the oil level falls below the level required for operation, the oil level indicator lights up, and then the engine stops automatically. The engine will not start until oil is added.

AC indicator

When the generator is running and producing electricity, the AC indicator light is on.

OVERLOAD indicator

The overload indicator lights up when the connected generator is overloaded, the inverter control unit overheats or the AC output voltage rises. If the overload indicator goes on, the engine will continue to operate, but the generator will no longer produce electricity. In this case, you must perform the following steps:

1. Turn off all connected electrical appliances and stop the engine.
2. Reduce the total power of the connected devices until the nominal power of the generator is reached.
3. Check if the vent grid is clogged. Remove excess dirt or debris, if any.
4. After checking, start the engine.

⚠ **IMPORTANT! The overload indicator may light up within several seconds after start-up or when connecting electrical devices requiring a high starting current, such as a compressor or voltage indicator. However, this is not a malfunction.**

Earthing bolt

Depending on the installed network, the generator's grounding screw must be connected either to the equipotential bonding bar (IT network) or to the grounding system (TN network). **The generator is built as an IT system (isolated terra) and has no internal connection between N and PE.** Grounding of the generator is not required for mobile applications and direct power supply to electrical loads. Grounding the generator or equipotential bonding via the grounding screw is not required for mobile applications and direct power supply to electrical loads. Equipotential bonding between the generator and the electrical loads is achieved via the PE contact of the sockets and the corresponding conductors of the power cables. Connection of the external distribution should only be carried out by a qualified electrician, observing all prescribed safety precautions.

It is the responsibility of a trained electrician to follow national regulation to properly assess the correct installation type.

Any modification to bond Neutral to Earth must only be performed by a qualified electrician in accordance with local regulations.

Carbon monoxide shutoff (for model KS 4500iS PRO)

Flashing red light: dangerous levels of carbon monoxide gas have built up, leave immediately until area has aired out. Move generator to well-ventilated area before operation. The CO sensor monitors for the accumulation of poisonous carbon monoxide gas around the generator when the engine is running.

If increasing levels of CO gas are detected, the CO Sensor automatically shuts down the engine.

CO sensor failure (for model KS 4500iS PRO)

Flashing yellow light: carbon monoxide sensor malfunction, sensor needs service.

SMALL Digital controller for models KS 4500iS, KS 4500iS HE (Fig.7)

A: Overload alarm
B: Output indicator
C: Low oil alarm
D: Fuel level indicator
E: Voltage, frequency, current, output power, working hours
F: Load

BIG Digital controller for model KS 4500iS PRO (Fig.8)

A: Voltage, requency, output power
B: Bluetooth App Control
C: AC Reset
D: Economy mode
E: Engine start
F: Fuel type
G: Output indicator, overload alarm, low oil alarm
H: CO sensor failure
I: Working hours
J: Fuel level indicator

Light switch (for model KS 4500iS PRO)

The generator control panel is equipped with a Light Switch button that activates additional illumination around the control panel and on the sides of the generator, providing improved visibility and convenient operation in low-light conditions.

CHECK BEFORE GETTING STARTED

Checking the fuel level

1. Unscrew the fuel cap and check the fuel level in the tank.
2. Fill the fuel tank to the fuel filter level.
3. Tighten the fuel cap securely.
4. For silent models of inverter generator, open the air intake vent on the fuel cap.

Recommended fuel: unleaded gasoline with an octane rating of 90–95 containing no more than 10% ethanol.
Fuel tank volume: see specifications table.

⚠ **IMPORTANT! Wipe up spilled fuel immediately with a clean, dry, soft cloth, as the fuel may harm painted surfaces or plastic parts.**

⚠ IMPORTANT! Be sure to observe the expiration date of the gasoline. If the generator is not going to be used for an extended period, always drain the gasoline from the carburetor and, if necessary, from the fuel tank. Deposits in the fuel system can lead to engine malfunctions.

Checking the oil level

The generator is transported free of motor oil. Do not start the engine until it is filled with sufficient amount of motor oil.

1. Open the service cover (fig. 9A).
2. Unscrew the oil dipstick (fig. 9B) and wipe it out with a clean cloth.
3. Fill the crankcase with engine oil. The recommended amount of oil for each model is indicated in the specification chart.
4. Insert the dipstick without screwing it in.
5. Check the oil level by a mark on the oil dipstick.
6. Add oil if its level is below the mark on the oil dipstick.
7. Screw on the dipstick.

Recommended motor oil: SAE 10W30, SAE 10W40.
Recommended motor oil grade: API Service SG type or higher.
Motor oil quantity: see specifications table.

GETTING STARTED

Before starting the engine, make sure that the rated power of power consumers matches with the power of generator. Do not exceed the nominal power of the generator. **Do not connect any devices before you start the engine!**

⚠ ATTENTION – DANGER! The peak power can be delivered for a short duration, up to approximately 5 seconds. Please note that this may vary depending on environmental conditions. The max power should be used for short periods for starting equipment with high inrush currents. It is not intended for continuous operation. The required starting power of the motor must not exceed the peak starting power of the generator.

⚠ ATTENTION – DANGER! Emergency generators should not run continuously (e.g. by adding fuel to the tank or connecting a large fuel tank) or longer than recommended: 4-6 hours for LPG/gasoline or gasoline generators (depending on load).

This material is for informational purposes only and does not constitute a manual for installing the equipment or connecting it to the mains, but we strongly recommend that you read the instructions below. Equipment connection must always be carried out by a certified electrician responsible for the installation and electrical connection of the equipment according to local laws and regulations. The manufacturer assumes no liability for improper connection of the equipment or for any material or physical damage that may result from improper installation, connection or operation of the equipment.

Commissioning

1. Fill the crankcase with engine oil. The recommended amount of oil for each model is indicated in the specification chart.
2. Check oil level with an oil dipstick. It should be between the MIN and MAX marks on the oil dipstick.
3. Check fuel level.
4. Check the air filter for correct installation.

In the first 20 operating hours of the generator, the following requirements should be met:

1. During commissioning, do not connect power consumers, the power of which exceeds 50% of the nominal (operating) power of the device.
2. After the first 20 operating hours, be sure to change the oil. It is better to drain oil while the engine is still hot after operation to ensure quick and complete oil draining.
3. Check and clean the air filter, fuel filter and spark plug.

LITHIUM BATTERY – CONNECTION & MAINTENANCE

⚠ IMPORTANT! During the first startup, it is necessary to connect the cable linking the generator and the battery.

The generator is shipped with terminals disconnected to prevent battery self-discharge during storage. To connect the battery of models KS 4500iS HE, KS 4500iS PRO generators, proceed as follows:

Fig.10

1. Open the service cover.
2. Connect the negative terminal of the battery by connecting the negative cable.

For models with electric start, check if the battery is charged. If necessary, recharge the battery with a dedicated charger for lithium-ion batteries or start the generator with a manual start and allow it to run idle while it is recharging.

Models with electric start are equipped with a lithium (LFP) starter battery. Connect the cable linking the generator and the battery (battery is shipped disconnected to prevent self-discharge). The battery is automatically charged while the generator is running; if the generator is used infrequently or the charge level is low, recharge it via the battery charging port using a suitable charger (max. 14–14.5 V, with LFP mode and reverse polarity protection, e.g., KS-B2A). Avoid repeated start attempts to prevent starter overheating. For long-term battery storage, disconnect the cable from the battery and recharge at least every 1–3 months to maintain the charge at 60%.

Battery Handling. Preparation for Long-Term Storage

If the generator is not used for an extended period (more than one month), the battery must be prepared for storage:

Disconnect the battery:

1. Turn off the generator and make sure all systems are de-energized.
2. Disconnect the cable connecting the generator and the battery.
3. If necessary, remove the battery from the generator for separate storage.

Storage conditions:

1. Store the battery in a dry, clean, and well-ventilated area at a temperature between +5 °C and +25 °C.
2. Avoid direct sunlight and exposure to moisture.

Maintaining the charge:

1. For long-term storage, it is recommended to charge the battery to 60%.
2. If the battery is stored for more than 3 months, it is recommended to recharge it every 2–3 months to 60%.

Returning the battery to operation.

Before reinstalling the battery on the generator:

1. Check the charge level and recharge if necessary.
2. Inspect the casing and terminals for any damage or corrosion.
3. Connect the battery.
4. Ensure all connections and mounts are secure.

Battery maintenance.

In Könner & Söhnen® models with electric start, you should periodically perform battery voltage checks. The generator battery has a voltage of 12V, if the voltage is lower, you should perform battery charging with the help of an external charger (not included in the delivery set).

To avoid discharging the battery, it is recommended to run the generator at least once a month for 30 minutes. If the generator is not used for a long time, please disconnect the battery from the terminals. The battery that comes with the generator does not require additional maintenance.

If the generator is not used for a long time, the battery may fail. To prolong battery life it is recommended to do battery charging with an external device (not included) every three months.

Battery warranted - three months from the date of purchase of the generator.

⚠ IMPORTANT! Please note that if you fail to start up generators, the batteries may run out; therefore, the batteries must be fully charged before starting operation.

Engine start

⚠ IMPORTANT! Useful tip: If the engine stops shortly after starting or does not start at all, we recommend draining the remaining settled fuel with possible impurities from the carburetor and checking the oil level. The generator is equipped with a low oil level protection system, and the engine will stop if the oil level in the engine is too low.

⚠ IMPORTANT! Deposits from the carburetor's float chamber should be drained regularly. If the generator is not going to be used for an extended period, close the fuel tap and drain the gasoline from the carburetor to prevent possible deposits from forming inside the carburetor.

Running generator on gasoline (KS 4500iS Model):

1. Check the oil level.
2. Check fuel level.
3. Set all circuit breakers to "OFF".
4. Turn the Multifunctional switch to the "START" position (fig. 11).
5. Pull the manual starter until a slight resistance is felt, then pull it toward you relatively sharply. Slowly return the manual starter by hand, do not release it abruptly.
6. After the engine starts, turn the multifunctional switch to the "RUN" position.
7. Wait 1-2 minutes and connect electrical appliances.

Fig. 11

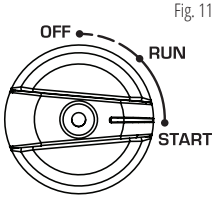

⚠ IMPORTANT! Useful tip: to ensure long-term operation of the generator engine, it is important to observe the following tips:

- Before connecting the load, allow the engine to run for 1-2 minutes to warm it up.

- When disconnecting the load after lengthy operation, do not turn off the generator. Allow the generator to run idle for 1-2 minutes so that it cools down.

⚠ ATTENTION – DANGER! Do not connect two or more devices at a time. The start-up of many devices requires high power. Devices should be connected one at a time according to their power rating.

Running generator on gasoline (KS 4500iS HE, KS 4500iE S PRO Models):

1. The generator is supplied with disconnected battery. When using the generator for the first time, open the maintenance door and connect the battery line.
2. Check oil level.
3. Check fuel level.
4. Set the fuel switch FUEL SWITCH to "Gasoline".
5. Turn the fuel valve handle to the "ON" position (OPEN), fig. 12.

Fig. 12

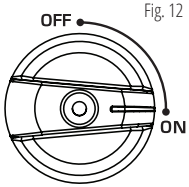

6.1 For manual start press MAIN POWER button to "ON" position, pull the handle of manual starter until a slight resistance is felt, then pull it relatively sharply. Slowly return the manual starter handle by hand, do not release it abruptly.

6.2. For electric start – press MAIN POWER button to "ON" position, then press the ENGINE START button, hold it until the engine starts, but no longer than 5 seconds.

7. Wait 1-2 minutes and connect electrical appliances.

Running generator on LPG (4500iS HE, KS 4500iE S PRO models):

Fig. 13



1. Check the oil level.
2. Set the fuel switch FUEL SWITCH to "LPG".
3. Connect the LPG hose to the LPG input (connect hose end **A** to the generator's LPG connection (fig. 13) and tighten with a wrench, but very carefully to avoid twisting and damaging the gas fitting inside the generator. The torque for tightening the hose when connecting the gas is 6-7 N·m.).
4. Connect the hose end with the reducer to the gas cylinder (connect hose end **B** to the gas cylinder, as shown in Fig. 13).
5. Open the gas valve on the cylinder.

⚠ IMPORTANT! Making sure that no gas is leaking.

6. When using for the first time, fill the gas line with gas by turning the key (pressing start button) to the "OFF" position and slowly pull the starter handle to the full cord length 2 to 3 times with the gas cylinder valve open.
7. For manual start KS 4500iS HE, KS 4500iE S PRO models, press MAIN POWER button to "ON" position, pull the manual starter until a slight resistance is felt, then pull it toward you relatively sharply. Slowly return the manual starter by hand, do not release it abruptly. For electric start - press MAIN POWER button to "ON" position, then press the ENGINE START button. If the engine does not start on the first try, press the ENGINE START button again in 3-5 seconds.

⚠ IMPORTANT! Disconnect the load from the generator before changing fuel. The Economy Mode switch must be in the "OFF" position.

It is recommended to stop the generator before switching from gasoline to LPG! Gasoline remains in the carburetor make it difficult to start the engine on LPG. Let the generator run out of gasoline until it stops. To do this, close the fuel valve with the generator running and wait until the generator stops completely. Then start the generator on LPG. You can also drain the remaining gasoline from the carburetor before starting the generator on LPG.

⚠ IMPORTANT! Place the container with gas only vertically, according to the instruction manual for gas cylinders. The horizontal placement of gas cylinders leads to hybrid generator gearbox failure.

⚠ IMPORTANT! Fuel switch should only be performed with the load off.

Operation of the generator with the external ATS unit (KS 4500iE S PRO Model)

The ENGINE SWITCH must be switched on (ON position) to connect the generator's 12V onboard voltage. The ATS switch on the generator must be switched on to transfer generator control to the external ATS unit. The internal controller remains deactivated. The main switch on the ATS unit should be switched on to activate the ATS unit's control electronics.

⚠ IMPORTANT! Via the ATS connector, individual components of the generator are controlled. It is strictly forbidden to connect external control devices to the ATS connector.

Operation in External control Mode (KS 4500iE S PRO Model)

⚠ IMPORTANT! It is strictly prohibited to use dry-contact control, an external ATS system, or the remote-start function when operating the generator on LPG.

In EXTERNAL CONTROL mode, the generator starts when the CONTROL TERMINAL contacts are closed and stops when they are opened. This mode allows the generator to be optimally integrated into various power supply systems through external control by devices equipped with potential-free "dry contacts", significantly expanding the range of applications.

To activate the EXTERNAL CONTROL mode, set the ENGINE SWITCH on the control panel to the ON position. The ATS switch must be turned off. The EXTERNAL CONTROL switch must be turned on.

⚠ IMPORTANT! The generator's control electronics consume a small amount of power as soon as the ENGINE SWITCH is turned on. We recommend charging the generator's starter battery at least once a month if the generator is used infrequently while the External control Mode is activated.

⚠ IMPORTANT! External control must be potential-free and may only be installed by qualified personnel.

To stop the engine, proceed as follows

1. Turn off all devices.
2. Allow the generator to run idle for approx. 1-2 minutes.
3. If the generator was operating on gasoline, close the fuel valve by turning it to the "OFF" position (fig. 14). If the generator was operating on gas, close the valve on the gas cylinder to stop the gas supply.
4. For model KS 4500i S turn the multifunctional switch to the "OFF" position (Fig. 15). For models KS 4500iS HE, KS 4500iES PRO press the ENGINE START button, then press MAIN POWER button to "OFF" position.
5. Unplug the devices.
6. After the generator stops, allow it to cool down.

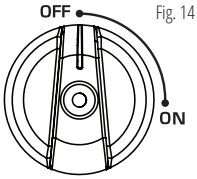

Fig. 14

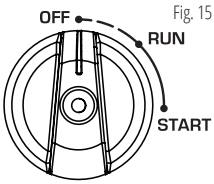

Fig. 15

FUNCTIONAL DESCRIPTION OF INVERTER GENERATORS

⚠ WARNING! It is strictly prohibited to use dry-contact control, an external ATS system, or the remote-start function when operating the generator on LPG.

Economy mode function

Activate it only when the load is low (up to approx. 20% of rated power) to reduce fuel consumption and noise. Switch Economy Mode OFF when connecting high starting current devices, increasing load, during parallel operation, or when charging a battery via 12V DC to avoid overload or voltage instability.

Parallel function

The total output power of the generators can be increased by connecting two inverter generators together using the Parallel Unit from Könner & Söhnen (not included in a set). Parallel connection of two generators ensures total rated output power of these generators.

Remote Control function for models KS 4500iS HE, KS 4500iS PRO (fig. 16)

Fig. 16

The generators can be monitored and controlled remotely using the dedicated mobile application via Bluetooth connection. The application allows you to start and stop the generator remotely and monitor its operating status in real time.

Through the application you can view key operating parameters such as AC voltage, AC current, frequency, running power (watts), current running time, and total operating hours. The app also displays generator fuel level status, and provides notifications about warnings or error conditions.

The mobile application **Konner Sohnen** is available for download from the Apple App Store and Google Play.

Google Play App Store



⚠ IMPORTANT! It is strictly prohibited to use dry-contact control, an external ATS system, or the remote-start function when operating the generator on LPG.

Remote Control Start. To start the generator using the remote control, set the MAIN POWER button to the "ON" position, turn fuel switch to ON and press start button on a remote.

To stop the generator remotely, press the STOP button on the remote control, turn fuel switch to "OFF", set MAIN POWER button to "OFF".

The operating range of the remote control is 25-40 m.

Charging the generator starter battery via the Battery Charging Port

1. Ensure the generator is switched OFF.
2. Connect a suitable battery charger to the Battery Charging Port on the generator control panel.
3. When the battery is charging, the red indicator light is on. When the battery is fully charged, the indicator light turns green.
4. Disconnect the charger from the generator after charging is complete.

Charging the battery after removing it from the generator

If you prefer to remove the battery and charge it separately, follow the instructions below:

1. Ensure the generator is switched OFF

2. Remove the service cover and disconnect the battery terminals.
3. Remove the battery from the generator.
4. Connect the battery to a suitable charger (observe correct polarity).
5. Charge the battery according to the charger manufacturer's instructions.
6. Reinstall the battery and reconnect the terminals.

⚠ **IMPORTANT! The 12V socket can only be used as a backup source for recharging batteries and shall not be deemed as a full-featured battery charger.**

MAINTENANCE

This manual compliance! You can find a list of service center addresses on the website of exclusive importer: **www.konner-sohnen.com**

Technical maintenance works

Unit	Action	At each start	First month or 20 operating hours	Every 3 months or 50 operating hours	Every 6 months or 100 operating hours	Every year or 300 operating hours
Motor oil	Level check	✓				
	Replacement		✓	✓		
Air filter	Check /Cleaning	✓	✓	✓		
	Replacement					✓
Spark plug	Cleaning		✓	✓		
	Replacement				✓	
Fuel tank	Level check	✓				
	Cleaning					✓
Fuel filter	Check (clean out)		✓	✓		

• If the generator often operates at high temperature or high load, the oil should be replaced every 25 operating hours.
• If the engine often runs in dusty or other harsh conditions, clean the air filter every 10 operating hours.
• If you missed the maintenance time, perform it as soon as possible to save the generator engine.

⚠ **IMPORTANT! The manufacturer shall not be liable for any damage caused by failure to perform maintenance work.**

RECOMMENDED OILS

Use oils designed for four-stroke cycle vehicle engines SAE10W-30, SAE10W-40. Motor oils with other viscosity levels, may be used only if the average air temperature in your region does not exceed the limits of the temperature range, specified in the table.

Upon oil level decrease it is necessary to add the required quantity in order to provide the correct generator operation. It is necessary to check the oil levels according to technical maintanance schedule. Further details can be found in the full version of the manual on our website.

SAE Viscosity Class	Operating temperature range
10W-30	from -25 °C to +30 °C
10W-40	from -25 °C to +40 °C (primary recommendation)

To drain engine oil, perform the following actions:

1. Please drain the oil while the engine is warm. This provides a quick and complete oil drain.
2. Wear protective gloves to avoid getting oil on the skin.
3. Open the service cover (fig. 9A).

4. Place a drain oil holding tank under the engine.
5. Turn the drain cap, located in the engine under the oil-depth gage cap (fig. 17).
6. Wait till the oil drains.
7. Replace the drain cap and tighten it well.
8. Close the maintenance cover.

The generator is equipped with a magnetic oil dipstick. The magnetic tip helps collect small metal particles that may appear in the engine oil during operation. When checking or changing the oil, remove the dipstick and wipe it clean, as metal particles may accumulate on the magnetic tip.

To refill oil, perform the following actions:

1. Make sure that the generator is set on flat level surface.
2. Open the oil-depth gage cap on the engine.
3. By means of a funnel, pour the advanced purification engine oil to the crankcase. The funnel is not included.

⚠ **NOTE! The engine oil can be pumped out using an oil suction pump instead of being drained.**

AIR FILTER TECHNICAL MAINTENANCE

Air filter cleaning is to be performed each 50 hours of the generator operation (every 10 hours in unusually dusty conditions).

Cleaning the filter:

1. Open the clips on the upper cap of the air filter.
2. Remove the sponge filtering element.
3. Remove all dirt deposits inside the hollow case of the air filter.
4. Thoroughly wash the filtering element in warmsoapy water.
5. Dry the sponge filter.
6. Dry filtering element is to be moistened by motor oil and excess oil is to be squeezed out.

SPARK PLUGS TECHNICAL MAINTENANCE

Spark plug has to be intact, without soot deposits and to have a correct gap.

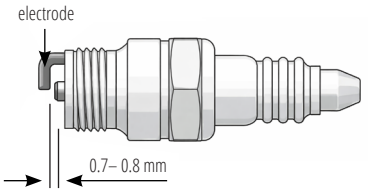

Spark plug verification (fig.18):

1. Remove the cap from the spark plug.
2. Remove the spark plug by means of a corresponding spanner.
3. Examine the spark plug. If is is shattered – it is necessary to replace it. Recommended replacement spark plugs A5RTC.
4. Measure the gap. It has to be within range 0,7-0,8 mm.
5. In case of repeated use, the spark plug has to be cleaned by means of a metal brush. After that – set the correct gap.

MUFFLER AND SPARK ARRESTER MAINTENANCE

The engine and muffler will get very hot after the generator has been started. Do not touch the engine or muffler with any part of your body or clothing during inspection or repair until they have cooled down.

Remove the screws and then pull the protective cover towards you. Loosen the bolts and remove the cover, screen and spark arrester of the muffler. Descale the screen and spark arrester of the muffler with a wire brush.Inspect the screen and spark arrester of the muffler. Replace them if they are damaged. Replace the spark arrester. Replace the screen and cover of the muffler. Replace the cover and tighten the screws.

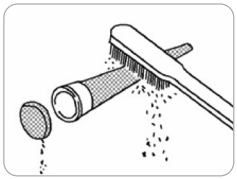

⚠ **IMPORTANT! Match the protrusion of the spark arrester to the hole in the pipe muffler.**

FUEL FILTER

⚠ ATTENTION – DANGER! Do not use gasoline near an open flame and do not smoke while handling it.

1. Remove the fuel tank cap and fuel filter.
2. Clean the filter with gasoline.
3. Wipe the filter and replace it.
4. Replace the fuel tank cap. Make sure that the fuel tank cap is tight.

STORAGE

Storage room has to be dry and free from dust deposits. Storage room also has to be locked away from children and animals. It is recommended to store and use the generator at temperature of -20°C to +40°C. Avoid direct sunlight, rain on the generator. When using and storing hybrid generator, gas tank should be kept indoors at temperatures below +10°C. If the temperature is lower, gas will evaporate.

⚠ IMPORTANT! Warning! Generator is to remain ready for operation at all times. Therefore in case of device malfunctions, they are to be repaired before dismounting the generator for storage.

⚠ IMPORTANT! Before long-term storage of the generator during the engine work close the fuel valve and let the engine to elaborate gasoline from carburetor. Wait until engine stops itself.

Long-term storage

- Generator and engine external parts (especially the cooling radiators) are to be thoroughly cleaned.
- Carburetor float chamber screw has to be removed and the chamber – drained.
- Remove the spark plug.
- Oil drain screw is to be removed and the oil – drained.
- Pour one teaspoon of motor oil to the cylinder (5-10 ml). After that – pull the starter cord for a few times, to let the oil equally distribute on the cylinder walls.
- Install the spark plug.
- Pull the starter handle until you feel the resistance. to let the piston relocate to the upper pressure tact point.
- Smoothly release the starter handle.
- Remove the battery terminals. Grease the battery terminals and connecting terminals with grease to protect against oxidation (if model equipped with fuel filter).

Generator transportation

⚠ IMPORTANT! We recommend filling the fuel tank only 70% to avoid fuel spillage during generator operation and transportation .

For easy generator transportation use packaging, which generator was sold in. Secure the box with the generator so that it does not tip over during transportation. Before moving the generator drain the fuel and disconnect the terminals of the battery. Keep the generator upright. Never place the generator on its side or upside down!

To move the generator from one place to another lift it by holding the handles. Be careful - the generator is heavy (over 90 kg). At least two men are needed to move the generator. Be careful, do not expose your feet under the frame of the generator.

RECYCLING INFORMATION

WEEE Directive Compliance (2012/19/EU)

This product is subject to the European Directive 2012/19/EU on Waste Electrical and Electronic Equipment (WEEE). The inverter generator must not be disposed of together with household waste. At the end of its service life, the product must be taken to an authorized collection point for electrical and electronic equipment for proper treatment, recovery, and recycling. The generator housing is made of plastic and should be recycled in accordance with local regulations. The packaging materials, including the cardboard box, are recyclable and should be disposed of through appropriate recycling systems.

Battery safety

- Used batteries must be disposed of in accordance with local environmental regulations.
- Do not dispose of batteries in fire or with household waste.
- Improper handling of batteries may cause leakage, fire, or explosion.
- Always replace batteries with the same type and specification recommended by the manufacturer.
- Avoid short-circuiting battery terminals.

POSSIBLE FAILURES AND SOLUTIONS

Typical failures	Possible reason	Solution
Engine does not starting	Engine starting swinch set to OFF position.	Set the engine starting switch to ON.
	Fuel valve set to off position.	Turn the valve to ON position.
	Air flap is opened.	Shut the air choke lever.
	No fuel.	Add fuel.
	Low-quality or dirty fuel is in engine.	Change the fuel.
	Sparking plug smoked or corrupted distance between contacts is not nominal.	Clean or replace the plug; Set proper distance between contacts.
Low engine power / heavy starting	Dirt in fuel tank.	Clean the fuel tank.
	Dirt in the air filter.	Clean the air filter.
	Water in a fuel tank/ carburetor; carburetor is jammed.	Empty the fuel tank, carburetor.
	Distance between contacts of a sparking plug is not nominal.	Set proper distance between contacts.
Engine overheated	Cooling fins are dirty.	Clean the cooling fins.
	Air filter is dirty.	Clean the air filter.
No voltage while working engine	Circuit breaker is active.	Turn on the cricuit breaker.
	Connected cables are corrupted.	Check the cables; if using extension cord, change it.
	Plugged device failure.	Try to connect other devices.
Connected devices are not working while generator is running	Generator is overloaded.	Unplug some devices to reduce load.
	Short circuit occured in one of the devices connected.	Unplug that device to restore the stability of a system.
	Air filter is dirty.	Clean the air filter.
	Repetitions of an engine are lower than nominal.	Contact the service center.

WARRANTY SERVICE TERMS

The international manufacturer warranty is 2 year. The warranty period starts from the date of purchase. Within the warranty period, if the product fails because of defects in the production process, it will be exchanged on the same product or repaired.

The warranty card should be kept throughout the warranty period. In case of warranty card loss, a second one will not be provided. The customer must provide the warranty card and buyer`s check during request for repair or exchange. Otherwise, the warranty service will not be provided.

Provide clean product to the service center. Parts, that must be replaced, are the property of the service center.

For product, service or warranty information contact us by email:

support@dimaxgroup.com

Warranty does not cover:

- If the user has failed to comply with the instructions in this manual.
- If the product features damaged or missing identification stickers or labels, serial numbers, etc.
- If product malfunction was due to improper transportation, storage and maintenance.
- In case of mechanical damages (cracks, chips, impact and fall marks, deformation of housing, power cord, plug or any other components), including those resulting from the freezing of water (ice formation), provided there are foreign objects inside the unit.
- If the product has been improperly installed and connected to the mains supply or misused.
- If the claimed malfunction cannot be diagnosed or demonstrated, warranty repair will not be performed.
- If proper operation of the product can be restored following cleaning from dust and dirt, appropriate adjustment, maintenance, oil change, etc.
- If the product is used for business related purposes.
- If faults are detected, which have been caused by product overload. Signs of overload are molten or discolored parts as a result of high temperatures, damaged

cylinder or piston surfaces, degraded piston rings or connecting rod bushes.

- The warranty does not cover the failure of the product automatic voltage regulator due to careless handling or mishandling.
- If faults are detected, which have been caused by instability of the user's power grid.
- If there are faults caused by contamination or fouling such as contamination of the fuel, oil or cooling system.
- If electrical cables or plugs show signs of mechanical or thermal damage.
- In the event of foreign liquids and objects, metal chips, etc. inside the product.
- If the malfunction is caused by the use of non-original spare parts and materials, oils, etc.
- If there are two or more faulty units that are not interconnected.
- If the damage was caused by natural factors such as dirt, dust, humidity, high or low temperature, natural disasters.
- In case of simultaneous failure of the rotor and stator.
- For wear parts and accessories (spark plugs, nozzles, pulleys, filter and safety elements, batteries, detachables, belts rubber seals, clutch springs, axles, hand starters, grease, mountings, working surfaces, hoses, chains, and tires).
- To preventive maintenance (cleaning, greasing, washing), installation and adjustment.
- If the product was tampered with, independently repaired or modified.
- In case of malfunctions resulting from normal wear and tear as a result of long-term use (end of life).
- If product operation was not stopped and continued after detecting a malfunction.
- Batteries supplied with equipment are covered by a warranty of three months.
- When using low-grade or inappropriate fuel.

CONTACTS

Deutschland:
Hergestellt unter Lizenz und Kontrolle der DIMAX International GmbH.
Importeur und Vertreter in Deutschland: DIMAX International GmbH, Flinger Broich 203, 40235 Düsseldorf, Deutschland. Produziert in VRC.
support@dimaxgroup.com
www.konner-sohnen.com

European Union:
Manufactured under license and control of DIMAX International GmbH,Flinger Broich 203, 40235 Duesseldorf,Germany.
Importer and representative in Netherlands DIMAX International Poland Ltd,Południowa 8 st, 05-830 Stara Wieś, Poland. Assembled in PRC.
support@dimaxgroup.com
www.konner-sohnen.com

The United Kingdom:
Innovation Trade Ltd.,63/66 Hatton Garden Fifth Floor, Suite 23, London, EC1N 8LE, info.uk@dimaxgroup.de
Technical support
support@dimaxgroup.com
www. konner-sohnen.uk

France:
Fabriqué sous licence et contrôle de DIMAX International GmbH, Flinger Broich 203, 40235 Düsseldorf, Allemagne.
Importateur et représentant en France et en Belgique DIMAX International Poland Ltd, Południowa 8 st, 05-830 Stara Wieś, Pologne. Assemblé en RPC.
support@dimaxgroup.com
www.konner-sohnen.fr

España:
Fabricado bajo licencia y control de DIMAX International GmbH, Flinger Broich 203, 40235 Düsseldorf, Alemania.
Importador y representante en España de DIMAX International Poland Ltd, Południowa 8 st, 05-830 Stara Wieś, Polonia.
Ensamblado en la República Popular China.
support@dimaxgroup.com
www.konner-sohnen.es

Polska:
Wyprodukowano na licencji i pod kontrolą DIMAX International GmbH,Flinger Broich 203, 40235 Duesseldorf, Niemcy.
Importer i przedstawiciel w Polsce: DIMAX International Poland Sp.z o. o. ul. Południowa 8, 05-830 Stara Wieś, Polska. Zmontowany w CRL.
support@dimaxgroup.com
www.konner-sohnen.pl

Україна:
Виготовлено за ліцензією та під контролем DIMAX International GmbH,Flinger Broich 203, 40235 Дюссельдорф, Німеччина.
Імпортер та представник в Україні: ТОВ "ТЕХНО ТРЕЙД КС"вул. Електротехнічна 47, 02225, м. Київ, Україна. Змонтовано в КНР
www.konner-sohnen.com.ua